ASSEMBLY INSTRUCTIONS

ITEM CODE : **IN1048**

ITEM DESCRIPTION : **CABINET**

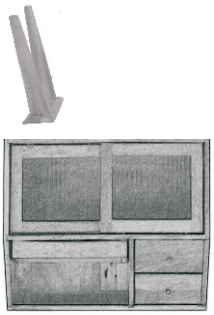

1

Reverse the cabinet & place the leg as shown & align the leg to match the apron.

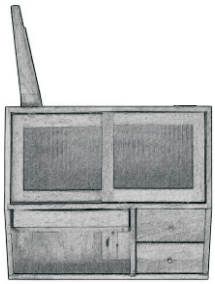

Insert the Bolt to fix the leg with the unit top and tighten the nut with the washer as shown in fig1

2

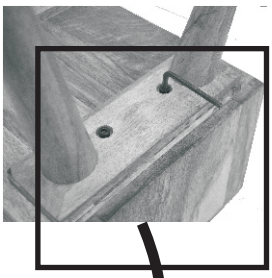

3

Fix the other leg in the similar way

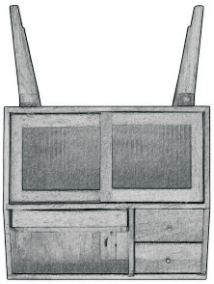

4

Reverse the cabinet straight. Now your cabinet is ready for use



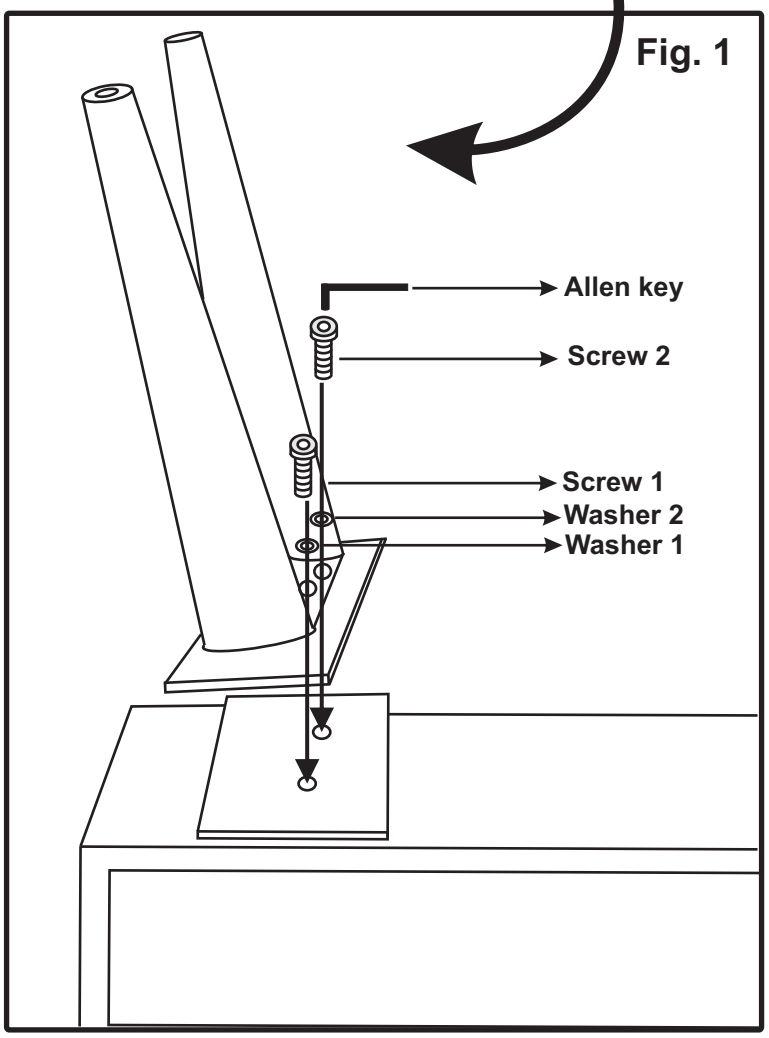

Fig. 1