ASSEMBLY INSTRUCTIONS

ITEM CODE : IN282

ITEM DESCRIPTION :

2 DRAWER MEDIA UNIT

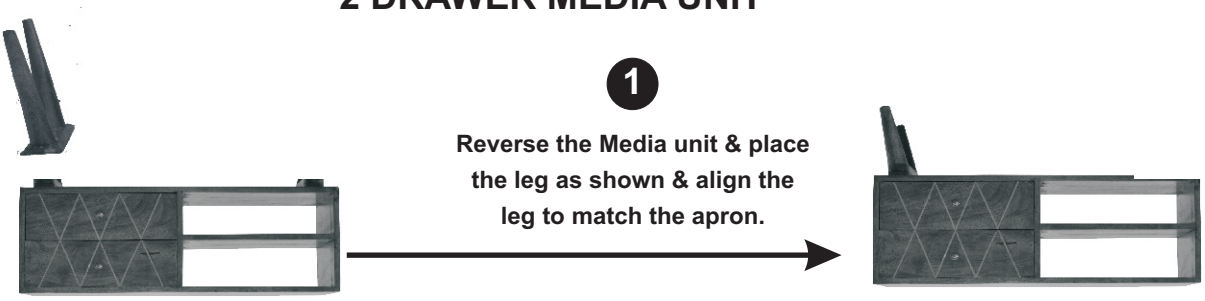

1

Reverse the Media unit & place the leg as shown & align the leg to match the apron.

Insert the Bolt to fix the leg with the Media unit top and tighten the nut with the washer as shown in fig1

2

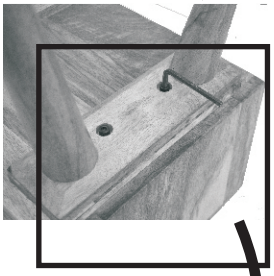

3

Fix the other leg in the similar way

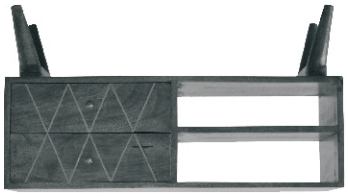

Reverse the Media unit straight. Now your Media unit is ready for use

4

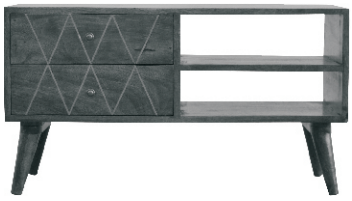

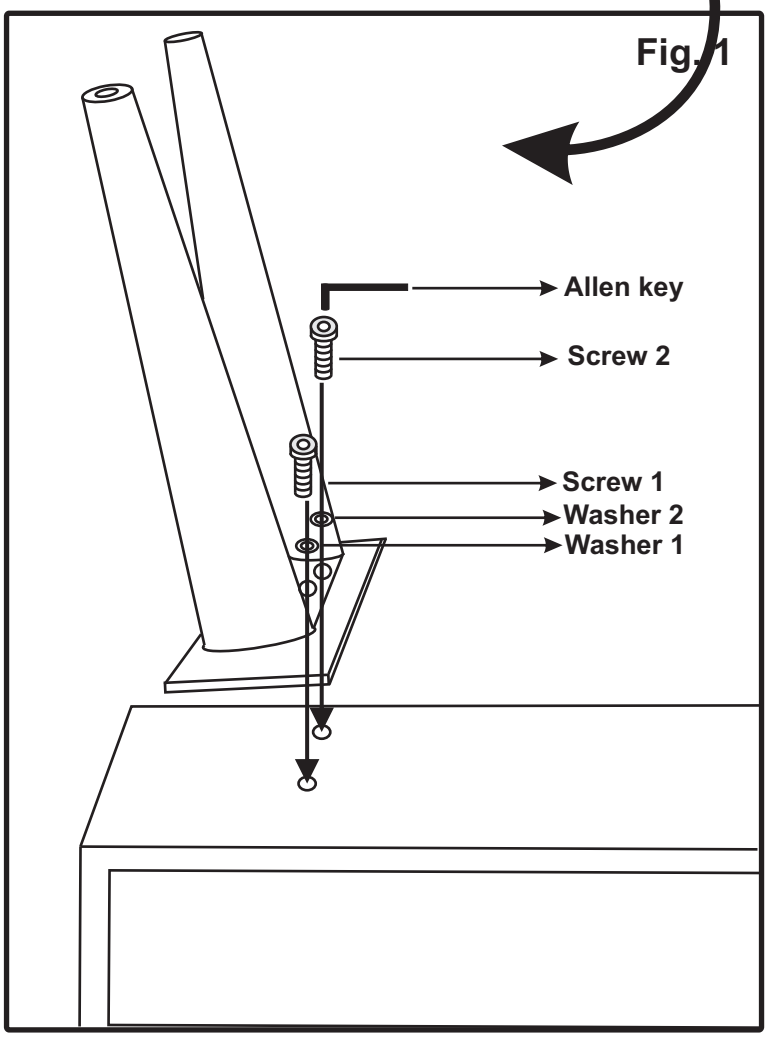

Fig. 1